NOTES:

1. INFORMATION SHOWN ON THIS PLAN IS THE RESULT OF A FIELD SURVEY PERFORMED BY SPRUHAN ENGINEERING, P.C. AS OF 11/19/2025.

2. DEED REFERENCE: BOOK 40805, PAGE 189
PLAN REFERENCE 1: PLAN BOOK 4, PAGE 335
PLYMOUTH COUNTY REGISTRY OF DEEDS

3. THIS PLAN IS NOT INTENDED TO BE RECORDED.

4. I CERTIFY THAT THE DWELLING SHOWN IS NOT LOCATED WITHIN A SPECIAL FLOOD HAZARD ZONE. IT IS LOCATED IN ZONE X, ON FLOOD HAZARD BOUNDARY MAP NUMBER 25023C0018J, IN COMMUNITY NUMBER: 250268, DATED 7/17/2012.

5. THIS PLAN DOES NOT SHOW ANY UNRECORDED OR UNWRITTEN EASEMENTS WHICH MAY EXIST. A REASONABLE AND DILIGENT ATTEMPT HAS BEEN MADE TO OBSERVE ANY APPARENT USES OF THE LAND; HOWEVER THIS NOT CONSTITUTE A GUARANTEE THAT NO SUCH EASEMENTS EXIST.

6. FIRST FLOOR ELEVATIONS ARE TAKEN AT THRESHOLD.

7. NO RESPONSIBILITY IS TAKEN FOR ZONING TABLE AS SPRUHAN ENGINEERING, P.C. ARE NOT ZONING EXPERTS. TABLE IS TAKEN FROM TABLE PROVIDED BY LOCAL ZONING ORDINANCE. CLIENT AND/OR ARCHITECT TO VERIFY THE ACCURACY OF ZONING ANALYSIS.

8. THE LOCATION OF ALL UNDERGROUND UTILITIES SHOWN HEREON ARE APPROXIMATE AND ARE BASED ON THE FIELD LOCATION OF ALL VISIBLE STRUCTURES SUCH AS CATCH BASINS, MANHOLES, WATER VALVES, ETC. AND COMPILED FROM PLANS SUPPLIED BY GOVERNMENT AGENCIES.

9. THE ELEVATIONS SHOWN ARE ON A TOWN OF HINGHAM DATUM.

EXISTING AREAS		
LOT AREA	8,833.0	S.F.
EXISTING IMPERVIOUS AREA		
BUILDING	1,220.7	S.F.
DRIVEWAY	491.6	S.F.
GARAGE	400.8	S.F.
GENERAL IMPERVIOUS	464.6	S.F.
TOTAL	***2,577.7***	***S.F.***
EXISTING PERVIOUS AREA		
WINDOW WELL	18.11	S.F.
TOTAL	***18.1***	***S.F.***
LANDSCAPE AREA	6,237.2	S.F.

LOT AREA	8,833.0	S.F.
PROPOSED IMPERVIOUS AREA		
BUILDING	2,006.2	S.F.
DRIVEWAY	716.2	S.F.
GENERAL IMPERVIOUS	243.7	S.F.
TOTAL	***2,966.1***	***S.F.***
PROPOSED PERVIOUS AREA		
TOTAL	***0.0***	***S.F.***
LANDSCAPE AREA	5,866.9	S.F.

TOTAL EXISTING IMPERVIOUS AREA =2,577.7 S.F.
TOTAL PROPOSED IMPERVIOUS AREA =2,966.1 S.F.

TOTAL **INCREASE** IN IMPERVIOUS AREA =388.4 S.F.

ZONING LEGEND

ZONING DISTRIC: RESIDENCE A

	REQUIRED	PROPOSED
MIN. AREA	20,000 S.F.	8,833 S.F.
MIN. FRONTAGE	125'	99.0'
MAX. BLDG. HEIGHT	35'	33.9'
MIN. YARD FRONT	25'	26.9'
SIDE [LEFT/RIGHT]	15'	15.3'
REAR	15	27.2'

REFER TO ARCHITECTURAL PLANS FOR ALL ZONING RELATED INFORMATION

PROPOSED FIRST FLOOR ELEVATION TO BE VERIFIED BY ARCHITECT PRIOR TO ANY CONCRETE BEING POURED.

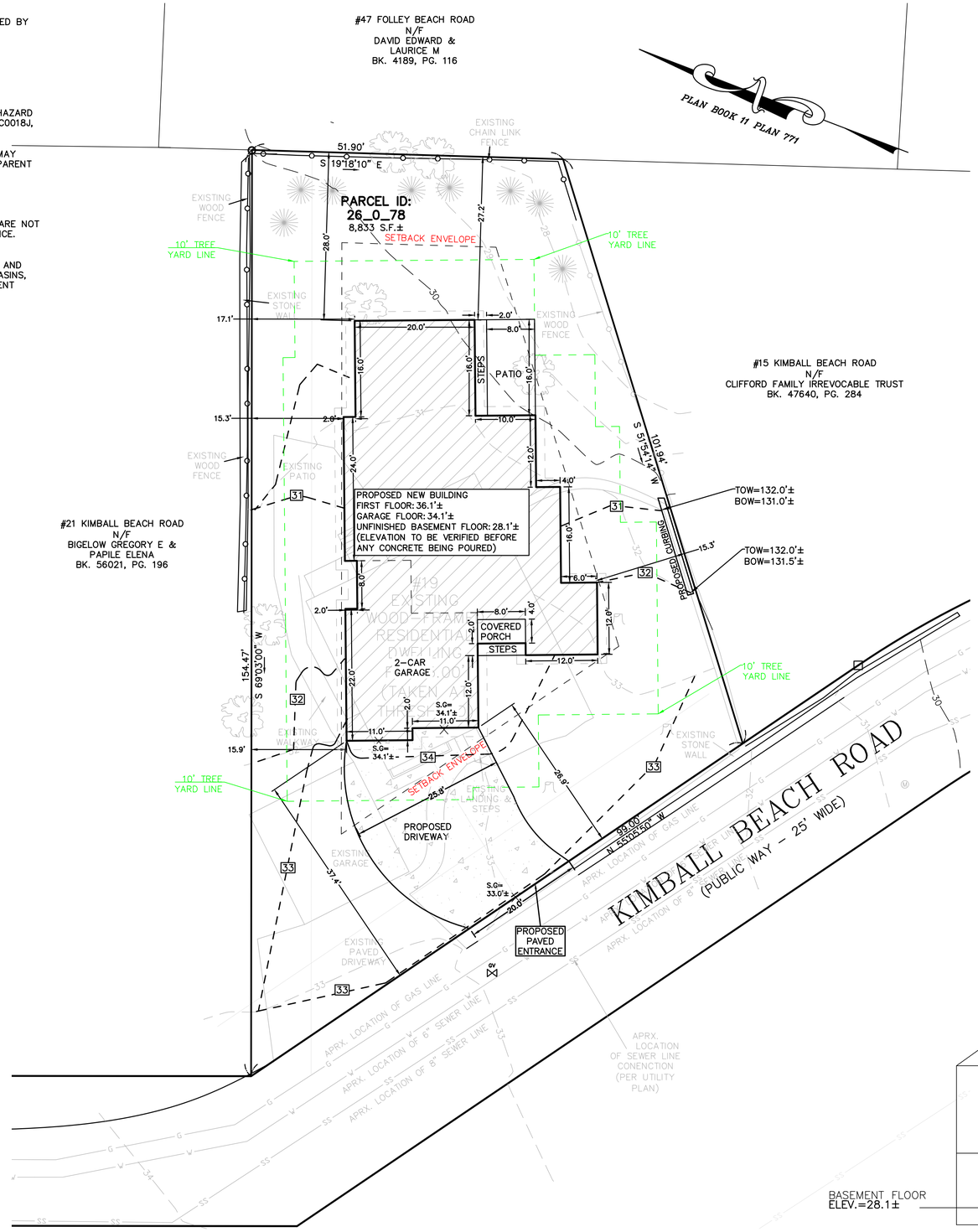

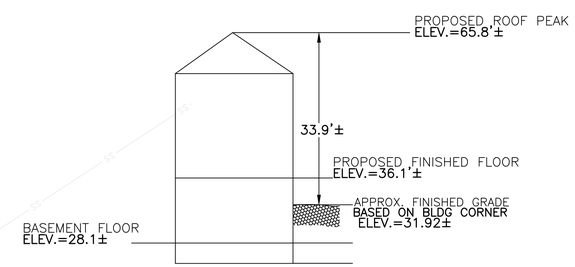

PROPOSED PROFILE
NOT TO SCALE

LEGEND

	BOUND
	IRON PIN/PIPE
	STONE POST
	TREE
	TREE STUMP
	SHRUBS/FLOWERS
	SIGN
	BOLLARD
	SEWER MANHOLE
	DRAIN MANHOLE
	CATCH BASIN
	WATER MANHOLE
	WATER VALVE
	HYDRANT
	GAS VALVE
	ELECTRIC MANHOLE
	ELECTRIC HANDHOLE
	UTILITY POLE
	LIGHT POLE
	MANHOLE
148.00	SPOT GRADE
TW	TOP OF WALL
BW	BOTTOM OF WALL
	EXISTING BUILDING
	RETAINING WALL
	STONE WALL
	FENCE
	TREE LINE
S	SEWER LINE
D	DRAIN LINE
W	WATER LINE
G	GAS LINE
E	UNDERGROUND ELECTRIC LINE
OHW	OVERHEAD WIRES
145	CONTOUR LINE (MJR)
146	CONTOUR LINE (MNR)

Spruhan Engineering, P.C.
80 JEWETT ST, (SUITE 1)
NEWTON, MA 02458
Tel: 617-816-0722
Email:edmond@spruhaneng.com

19 KIMBALL BEACH ROAD
HINGHAM
MASSACHUSETTS

CIVIL PLANS

REVISION BLOCK

DESCRIPTION	DATE

All legal rights including, but not limited to, copyright and design patent rights, in the designs, arrangements and plans shown on this document are the property of Spruhan Engineering, P.C. They may not be used or reused in whole or in part, except in connection with this project, without the prior written consent of Spruhan Engineering, P.C.. Written dimensions on these drawings shall have precedence over scaled dimensions. Contractors shall verify and be responsible for all dimensions and conditions on this project, and Spruhan Engineering, P.C., must be notified of any variation from the dimensions and conditions shown by these drawings.

COMMONWEALTH OF MASSACHUSETTS
CHRISTOPHER C. CHARLTON
NO. 48649
PROFESSIONAL LAND SURVEYOR

DATE:	1/13/2026
DRAWN BY:	Y.L
CHECKED BY:	G.B
APPROVED BY:	C.C

CIVIL PLAN I

SHEET 1 OF 5

GENERAL NOTES

1. THE CONTRACTOR SHALL REPORT TO THE OWNER AND ENGINEER OF ANY SIGNIFICANT VARIATIONS IN EXISTING SITE CONDITIONS FROM THOSE SHOWN ON THESE PLANS. ANY PROPOSED REVISIONS TO THE WORK, IF REQUIRED BY THESE SITE CONDITIONS, SHALL NOT BE UNDERTAKEN UNTIL REVIEWED AND APPROVED BY THE OWNER AND THE ENGINEER.
2. IN ORDER TO PROTECT THE PUBLIC SAFETY DURING CONSTRUCTION, THE CONTRACTOR IS RESPONSIBLE FOR INSTALLING AND MAINTAINING AT ALL TIMES ALL NECESSARY SAFETY DEVICES AND PERSONNEL, WARNING LIGHTS, BARRICADES, AND POLICE OFFICERS.
3. ALL WORK SHALL CONFORM TO TOWN OF HINGHAM GENERAL CONSTRUCTION STANDARDS.
4. THE CONTRACTOR SHALL REGULARLY INSPECT THE PERIMETER OF THE PROPERTY TO CLEAN UP AND REMOVE LOOSE CONSTRUCTION DEBRIS BEFORE IT LEAVES THE SITE. ALL DEMOLITION DEBRIS SHALL BE PROMPTLY REMOVED FROM THE SITE TO A LEGAL DUMP SITE. ALL TRUCKS LEAVING THE SITE SHALL BE COVERED.
5. IT SHALL BE THE RESPONSIBILITY OF THE CONTRACTOR TO INSTITUTE EROSION CONTROL MEASURES ON AN AS NECESSARY BASIS, SUCH THAT EXCESSIVE SOIL EROSION DOES NOT OCCUR.
6. THE LOCATION OF UNDERGROUND UTILITIES AS REPRESENTED ON THESE PLANS IS BASED UPON PLANS AND INFORMATION PROVIDED BY THE RESPECTIVE UTILITY COMPANIES OR MUNICIPAL DEPARTMENTS SUPPLEMENTED BY FIELD IDENTIFICATION WHEREVER POSSIBLE. NO WARRANTY IS MADE AS TO THE ACCURACY OF THESE LOCATIONS OR THAT ALL UNDERGROUND UTILITIES ARE SHOWN. THE CONTRACTOR SHALL CONTRACT DIG SAFE AT LEAST 72 HOURS PRIOR TO THE START OF CONSTRUCTION. DIG SAFE TELEPHONE NUMBER IS 1-800-322-4844.
7. THE CONTRACTOR SHALL VERIFY THE LOCATION, SIZE AND DEPTH OF EXISTING UTILITIES PRIOR TO TAPPING INTO, CROSSING OR EXTENDING THEM. IF THE NEW WORK POSES A CONFLICT WITH EXISTING UTILITIES, THE ENGINEER SHALL BE NOTIFIED PRIOR TO THE CONTRACTOR CONTINUING.
8. NO LEDGE, BOULDERS, OR OTHER UNYIELDING MATERIALS ARE TO BE LEFT WITHIN 6" OF THE WATER IN THE TRENCH, NOR ARE THEY TO BE USED FOR BACKFILL FOR THE FIRST 12" ABOVE THE PIPES.
9. PAVEMENT AREA SHALL BE PAVED TO A THICKNESS AS SHOWN ON THE PLANS MEASURED AFTER COMPACTION, WITH A BINDER COURSE AND TOP COURSE OF CLASS I BITUMINOUS CONCRETE PAVEMENT, TYPE I-1.
10. BASE MATERIAL SHALL BE CLEAN BANK RUN GRAVEL, CONFORMING TO M.D.P.W. M1.03.1, WITH NO STONES LARGER THAN THREE (3) INCHES IN DIAMETER AND SHALL BE PLACED AND ROLLED WITH AT LEAST A TEN TON ROLLER. THE SURFACES SHALL BE WET DURING ROLLING TO BIND THE MATERIAL. ALL STONES OF 4" DIAMETER OR LARGER SHALL BE REMOVED FROM THE SUB-BASE PRIOR TO PLACING BASE MATERIAL.
11. ALL EXISTING PAVING TO BE DISTURBED SHALL BE CUT ALONG A STRAIGHT LINE THROUGH ITS ENTIRE THICKNESS. BUT THE NEW PAVING INTO THE EXISTING PAVEMENT TO REMAIN.
12. ANY PAVEMENT REMOVED FOR UTILITY TRENCH EXCAVATION OR OTHERWISE DAMAGED DURING CONSTRUCTION SHALL BE REPLACED TO MATCH EXISTING PAVEMENT OR SHALL BE REPLACED WITH A BINDER (BASE COURSE) NOT LESS THAN 3" IN DEPTH AND THE TOP COURSE SHALL BE 1-1/2 " IN DEPTH. THE MINIMUM TOTAL THICKNESS OF BOTH COURSES, MEASURED AFTER ROLLING, SHALL BE 4-1/2".
13. THE CONTRACTOR SHALL APPLY FOR A STREET OPENING AND UTILITY CONNECTION PERMITS AND SIDEWALK CROSSING PERMIT WITH THE TOWN OF HINGHAM DPW.
14. CONTRACTOR TO ENSURE THAT ALL SURFACE WATER IS DIVERTED AWAY FROM BUILDING FOUNDATION DURING FINAL GRADING.

BACKFLOW PREVENTERS MUST BE INSTALLED IN ALL NEW BASEMENT FIXTURES.

CONTRACTOR TO NOTIFY ENGINEER OF RECORD IF ANY GROUNDWATER IS FOUND DURING EXCAVATION/CONSTRUCTION

POWER BACKUP AND BACKFLOW PREVENTER MUST BE INSTALLED IN ALL SUMP PUMPS.

CONTRACTOR SHALL ENSURE THAT THE EXISTING AND PROPOSED FOUNDATIONS ARE NOT UNDERMINED BY THE PROPOSED INFILTRATION SYSTEMS

ALL SURFACE WATER RUNOFF SHALL BE DIRECTED AWAY FROM BUILDING FOUNDATION AND AWAY FROM NEIGHBORING PROPERTY.

EXCAVATION FOR THE INFILTRATION SYSTEM MUST BE INSPECTED BY THE ENGINEER OF RECORD PRIOR TO INSTALLATION. THE ENGINEER MUST BE NOTIFIED AT LEAST 72 HOURS IN ADVANCE TO SCHEDULE THIS INSPECTION.

CONTRACTOR SHALL ENSURE THAT ALL DRAIN PIPES ARE INSTALLED WITH A MINIMUM SLOPE OF 1.0%.

LEGEND	
TOS	TOP OF SYSTEM
TOC	TOP OF CHAMBER
BOC	BOTTOM OF CHAMBER
BOS	BOTTOM OF SYSTEM
Ⓓ	DOWNSPOUT
INV	INVERT
TOW	TOP OF WALL
BOW	BOTTOM OF WALL

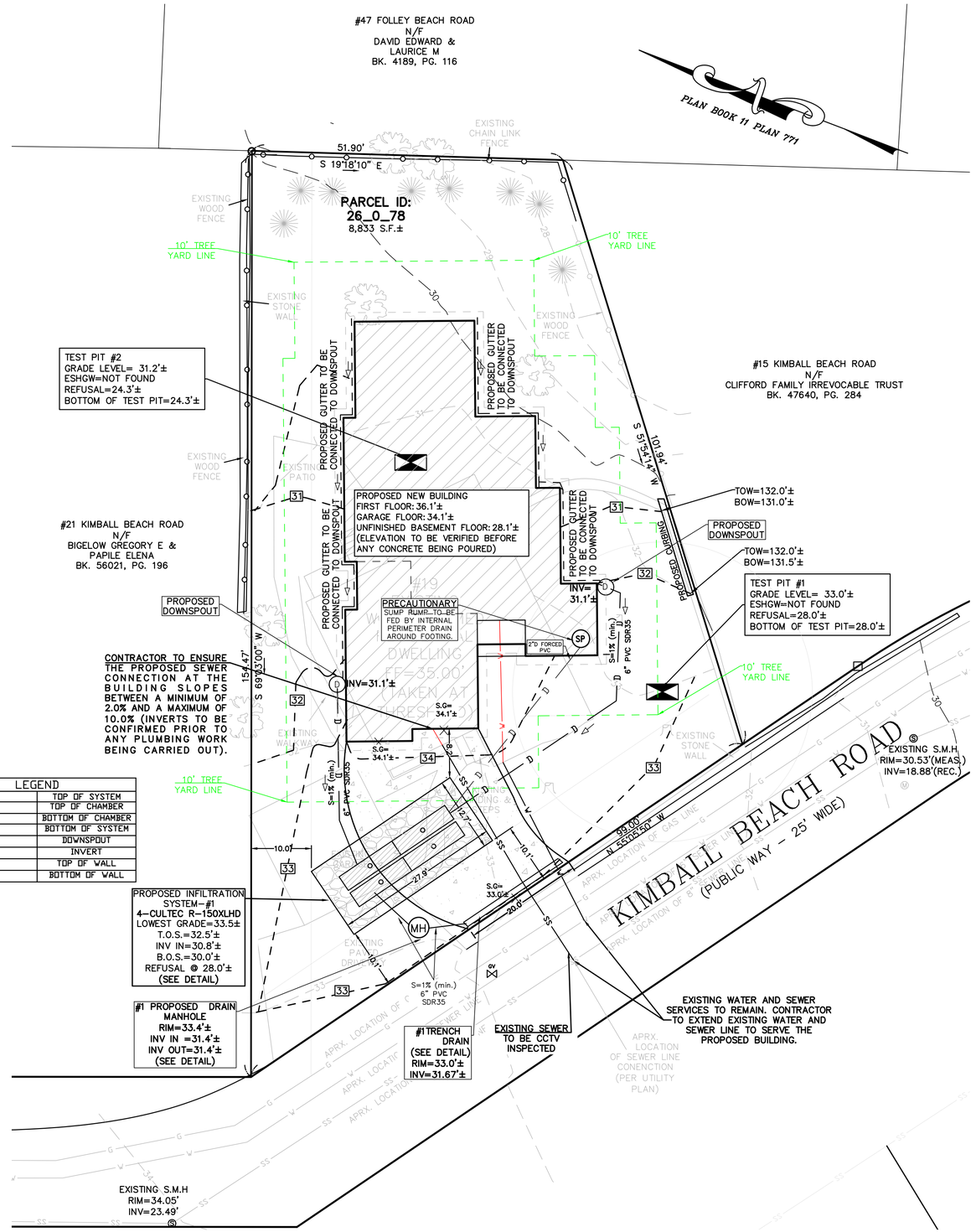

LEGEND

	BOUND
	IRON PIN/PIPE
	STONE POST
	TREE
	TREE STUMP
	SHRUBS/FLOWERS
	SIGN
	BOLLARD
Ⓢ	SEWER MANHOLE
Ⓓ	DOWNSPOUT
	CATCH BASIN
Ⓦ	WATER MANHOLE
WV	WATER VALVE
	HYDRANT
GV	GAS VALVE
Ⓔ	ELECTRIC MANHOLE
EL	ELECTRIC HANDHOLE
	UTILITY POLE
	LIGHT POLE
Ⓜ	MANHOLE
148.00	SPOT GRADE
TW	TOP OF WALL
BW	BOTTOM OF WALL
	EXISTING BUILDING
	RETAINING WALL
	STONE WALL
	FENCE
	TREE LINE
S	SEWER LINE
D	DRAIN LINE
W	WATER LINE
G	GAS LINE
E	UNDERGROUND ELECTRIC LINE
OHW	OVERHEAD WIRES
145	CONTOUR LINE (MJR)
146	CONTOUR LINE (MNR)

DEEP OBSERVATION HOLE LOG

DEEP OBSERVATION HOLE NUMBER:					TP-1	GROUND ELEVATION:					--
Depth (in)	Horizon/ Layer	Matrix: Color-Moist	Redoximorphic Features: Depth (in)	Color	Percent	Texture (USDA)	Coarse Fragments (Percent by Volume): Gravel	Cobbles & Stones	Structure	Consistence (Moist)	Other
0-18	Ap	10 YR §	--	--	--	SANDY LOAM	--	--	CRB	FRI	--
18-36	Bw	10 YR §	--	--	--	LOAMY SAND	--	--	GRAN	V.FRI	1
36-60	C	10 YR §	--	--	--	LOAMY SAND	--	--	GRAN	V.FRI	2
--	--	--	--	--	--	--	--	--	--	--	--

NOTES:
1. SHALE ROCK OBSERVED THROUGHOUT
2. REFUSAL @ 60"
3. LOGGED BY ALFONS KOKA, SE14000 ON 12/06/2025

DEEP OBSERVATION HOLE LOG

DEEP OBSERVATION HOLE NUMBER:					TP-2	GROUND ELEVATION:					--
Depth (in)	Horizon/ Layer	Matrix: Color-Moist	Redoximorphic Features: Depth (in)	Color	Percent	Texture (USDA)	Coarse Fragments (Percent by Volume): Gravel	Cobbles & Stones	Structure	Consistence (Moist)	Other
0-20	Ap	10 YR §	--	--	--	SANDY LOAM	--	--	CRB	FRI	--
20-38	Bw	10 YR §	--	--	--	LOAMY SAND	--	--	GRAN	V.FRI	--
38-83	C	10 YR §	--	--	--	LOAMY SAND	--	--	GRAN	V.FRI	1
--	--	--	--	--	--	--	--	--	--	--	--

NOTES:
1. NO REDOX OBSEREVED
2. REFUSAL @ 83"
3. LOGGED BY ALFONS KOKA, SE14000 ON 12/06/2025

CUT & FILL CALCULATIONS	
	VOLUME (CF)
CUT	7,384.74 ±
FILL	2,327.79 ±
TOTAL (EXPORT)	5,056.95 ±

RAIN FALL	RUNOFF RATE		VOLUME OF RUNOFF	
	EXISTING	PROPOSED	EXISTING	PROPOSED
2 year	0.19	0.02	649	62
10 year	0.28	0.03	1,034	160
25 year	0.33	0.09	1,293	298
100 year	0.41	0.25	1,657	580

Spruhan Engineering, P.C.
80 JEWETT ST, (SUITE 1)
NEWTON, MA 02458
Tel: 617-816-0722
Email:edmond@spruhaneng.com

19 KIMBALL BEACH ROAD
HINGHAM
MASSACHUSETTS

CIVIL PLANS

REVISION BLOCK

DESCRIPTION	DATE

All legal rights including, but not limited to, copyright and design patent rights, in the designs, arrangements and plans shown on this document are the property of Spruhan Engineering, P.C. They may not be used or reused in whole or in part, except in connection with this project, without the prior written consent of Spruhan Engineering, P.C.. Written dimensions on these drawings shall have precedence over scaled dimensions. Contractors shall verify and be responsible for all dimensions and conditions on this project, and Spruhan Engineering, P.C., must be notified of any variation from the dimensions and conditions shown by these drawings.

COMMONWEALTH OF MASSACHUSETTS
EDMOND SPRUHAN
CIVIL
No. 53316
REGISTERED PROFESSIONAL ENGINEER

DATE:	01/13/2026
DRAWN BY:	Y.L
CHECKED BY:	E.S
APPROVED BY:	E.S

CIVIL PLAN II

SHEET 2 OF 5

CULTEC RECHARGER® 150XLHD SPECIFICATIONS

GENERAL

CULTEC RECHARGER® 150XLHD CHAMBERS ARE DESIGNED FOR UNDERGROUND STORMWATER MANAGEMENT. THE CHAMBERS MAY BE USED FOR RETENTION,

RECHARGING, DETENTION OR CONTROLLING THE FLOW OF ON-SITE STORMWATER RUNOFF.

CHAMBER PARAMETERS

1. THE CHAMBERS SHALL BE MANUFACTURED IN THE U.S.A. BY CULTEC OF BROOKFIELD, CT (CULTEC.COM, 203-775-4416).

2. THE CHAMBERS SHALL BE DESIGNED AND VALIDATED VIA FINITE ELEMENT ANALYSIS IN ACCORDANCE WITH THE ASTM F2787 "STANDARD PRACTICE FOR STRUCTURAL

DESIGN OF THERMOPLASTIC CORRUGATED WALL STORMWATER COLLECTION CHAMBERS". THE LOAD CONFIGURATION SHALL INCLUDE:

a. INSTANTANEOUS AASHTO DESIGN TRUCK LIVE LOAD AT MINIMUM COVER

b. MAXIMUM PERMANENT (50-YEAR) COVER LOAD

c. 1-WEEK PARKED AASHTO DESIGN TRUCK LOAD.

3. THE INSTALLED CHAMBER SYSTEM SHALL PROVIDE RESISTANCE TO THE LOADS AND LOAD FACTORS AS DEFINED IN THE AASHTO LRFD BRIDGE DESIGN

SPECIFICATIONS SECTION 12.12, WHEN INSTALLED ACCORDING TO CULTEC'S RECOMMENDED INSTALLATION INSTRUCTIONS. THE STRUCTURAL DESIGN OF THE CHAMBERS SHALL INCLUDE THE FOLLOWING:

a. THE MINIMUM SAFETY FACTOR FOR LIVE LOADS SHALL BE 1.75

b. THE MINIMUM SAFETY FACTOR FOR DEAD LOADS SHALL BE 1.95.

4. THE CHAMBER SHALL BE VACUUM THERMOFORMED OF POLYETHYLENE WITH A BLACK INTERIOR AND BLUE EXTERIOR.

5. THE CHAMBER SHALL BE ARCHED IN SHAPE.

6. THE CHAMBER SHALL BE OPEN-BOTTOMED.

7. THE CHAMBER SHALL BE JOINED USING AN INTERLOCKING OVERLAPPING RIB METHOD. CONNECTIONS MUST BE FULLY SHOULDERED OVERLAPPING RIBS, HAVING NO SEPARATE COUPLINGS OR SEPARATE END WALLS.

8. THE NOMINAL CHAMBER DIMENSIONS OF THE CULTEC RECHARGER® 150XLHD SHALL BE 18.5 INCHES (470 MM) TALL, 33 INCHES (838 MM) WIDE AND 11 FEET (3.35 M) LONG. THE INSTALLED LENGTH OF A JOINED RECHARGER® 150XLHD SHALL BE 10.25 FEET (3.12 M).

9. MAXIMUM INLET OPENING ON THE CHAMBER END WALL IS 12 INCHES (300 MM) HDPE AND 15 INCHES (375 MM) PVC.

10. THE CHAMBER SHALL HAVE TWO SIDE PORTALS TO ACCEPT CULTEC HVLV® FC-24 FEED CONNECTORS TO CREATE AN INTERNAL MANIFOLD. THE NOMINAL I.D. DIMENSIONS OF EACH SIDE PORTAL SHALL BE 8.5 INCHES (216 MM) HIGH BY 12 INCHES (304 MM) WIDE. MAXIMUM ALLOWABLE O.D. IN THE SIDE PORTAL IS 10 INCHES (250 MM) HDPE, PVC.

11. THE NOMINAL CHAMBER DIMENSIONS OF THE CULTEC HVLV® FC-24 FEED CONNECTOR SHALL BE 12 INCHES (305 MM) TALL, 16 INCHES (406 MM) WIDE AND 24.2 INCHES (615 MM) LONG.

12. THE NOMINAL STORAGE VOLUME OF THE RECHARGER® 150XLHD CHAMBER SHALL BE 2.650 FT3 / FT (0.246 M3 / M) – WITHOUT STONE. THE NOMINAL STORAGE

VOLUME OF A SINGLE RECHARGER 150XLRHD STAND ALONE UNIT SHALL BE 29.15 FT3 (0.83 M3) – WITHOUT STONE. THE NOMINAL STORAGE VOLUME OF A JOINED RECHARGER® 150XLIHD INTERMEDIATE UNIT SHALL BE 27.16 FT3 (0.77 M3) – WITHOUT STONE. THE NOMINAL STORAGE VOLUME OF THE LENGTH ADJUSTMENT AMOUNT PER RUN SHALL BE 1.99 FT3 (0.18 M3) – WITHOUT STONE.

13. THE NOMINAL STORAGE VOLUME OF THE HVLV® FC-24 FEED CONNECTOR SHALL BE 0.913 FT3 / FT (0.085 M3 / M) – WITHOUT STONE.

14. THE RECHARGER® 150XLHD CHAMBER SHALL HAVE THIRTY DISCHARGE HOLES BORED INTO THE SIDEWALLS OF THE UNIT'S CORE TO PROMOTE LATERAL CONVEYANCE

OF WATER.

15. THE RECHARGER® 150XLHD CHAMBER SHALL HAVE 20 CORRUGATIONS.

16. THE END WALL OF THE CHAMBER, WHEN PRESENT, SHALL BE AN INTEGRAL PART OF THE CONTINUOUSLY FORMED UNIT. SEPARATE END PLATES CANNOT BE USED WITH

THIS UNIT.

17. THE RECHARGER® 150XLRHD STAND ALONE UNIT MUST BE FORMED AS A WHOLE CHAMBER HAVING TWO FULLY FORMED INTEGRAL END WALLS AND HAVING NO SEPARATE END PLATES OR SEPARATE END WALLS.

18. THE RECHARGER® 150XLSHD STARTER UNIT MUST BE FORMED AS A WHOLE CHAMBER HAVING ONE FULLY FORMED INTEGRAL END WALL AND ONE PARTIALLY FORMED INTEGRAL END WALL WITH A LOWER TRANSFER OPENING OF 10 INCHES (254 MM) HIGH X 20.5 INCHES (521 MM)WIDE.

19. THE RECHARGER® 150XLIHD INTERMEDIATE UNIT MUST BE FORMED AS A WHOLE CHAMBER HAVING ONE FULLY OPEN END WALL AND ONE PARTIALLY FORMED INTEGRAL END WALL WITH A LOWER TRANSFER OPENING OF 10 INCHES (254 MM) HIGH X 20.5 INCHES (521 MM) WIDE.

20. THE RECHARGER® 150XLEHD END UNIT MUST BE FORMED AS A WHOLE CHAMBER HAVING ONE FULLY FORMED INTEGRAL END WALL AND ONE FULLY OPEN END WALL AND HAVING NO SEPARATE END PLATES OR END WALLS.

21. THE HVLV® FC-24 FEED CONNECTOR MUST BE FORMED AS A WHOLE CHAMBER HAVING TWO OPEN END WALLS AND HAVING NO SEPARATE END PLATES OR SEPARATE END WALLS. THE UNIT SHALL FIT INTO THE SIDE PORTALS OF THE RECHARGER® 150XLHD AND ACT AS CROSS FEED CONNECTIONS.

22. CHAMBERS MUST HAVE HORIZONTAL STIFFENING FLEX REDUCTION STEPS BETWEEN THE RIBS.

23. THE CHAMBER SHALL HAVE A RAISED INTEGRAL CAP AT THE TOP OF THE ARCH IN THE CENTER OF EACH UNIT TO BE USED AS AN OPTIONAL INSPECTION PORT OR CLEAN-OUT.

24. THE UNITS MAY BE TRIMMED TO CUSTOM LENGTHS BY CUTTING BACK TO ANY CORRUGATION ON THE LARGE RIB END.

25. THE CHAMBER SHALL BE MANUFACTURED IN AN ISO 9001:2015 CERTIFIED FACILITY.

26. MAXIMUM ALLOWABLE COVER OVER THE TOP OF THE CHAMBER SHALL BE 12' (3.66 M).

27. THE INSTALLED CHAMBER SYSTEM SHALL BE STRUCTURALLY DESIGNED TO PROVIDE RESISTANCE TO LIVE LOADS AS DEFINED BY THE AASHTO H-20/HL-93SPECIFICATION WHEN INSTALLED ACCORDING TO CULTEC'S RECOMMENDED INSTALLATION INSTRUCTIONS.

Typical Cross Section for Traffic Application

SYSTEM:	LOWEST GRADE	TOS	TOC	INV. IN=	BOC	BOS	STONE BASE
#1	33.5'±	32.5'±	32.0'±	30.8'±	30.5'±	30.0'±	27.92'X12.67'X2.54'

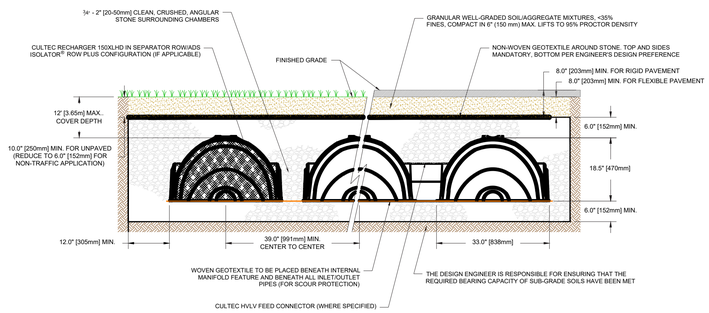

Typical Profile View for Traffic Application

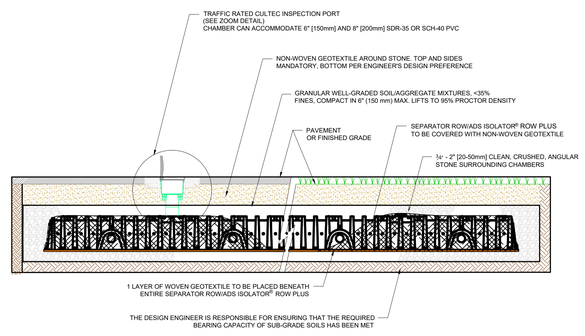

Three View Drawing

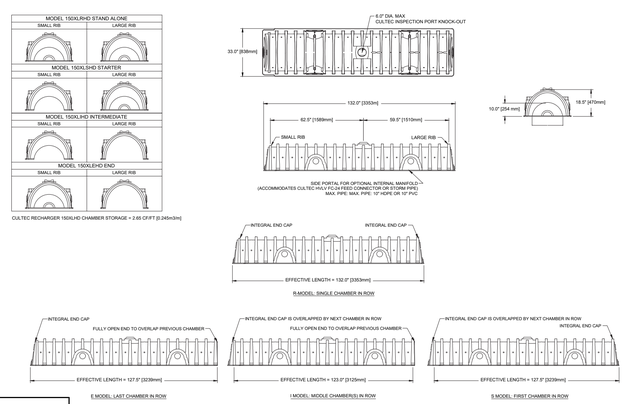

LEGEND	
TOS	TOP OF SYSTEM
TOC	TOP OF CHAMBER
BOC	BOTTOM OF CHAMBER
BOS	BOTTOM OF SYSTEM
Ⓓ	DOWNSPOUT
INV	INVERT

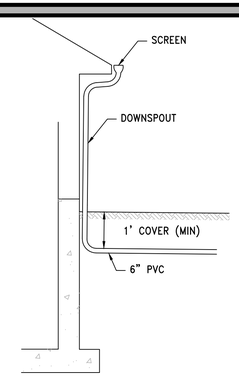

TYPICAL DOWNSPOUT DETAIL

N.T.S.

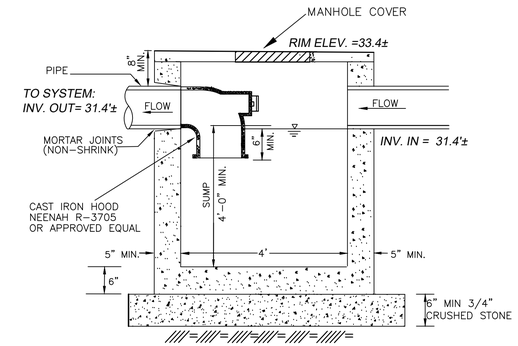

TYPICAL DRAIN MANHOLE DETAIL

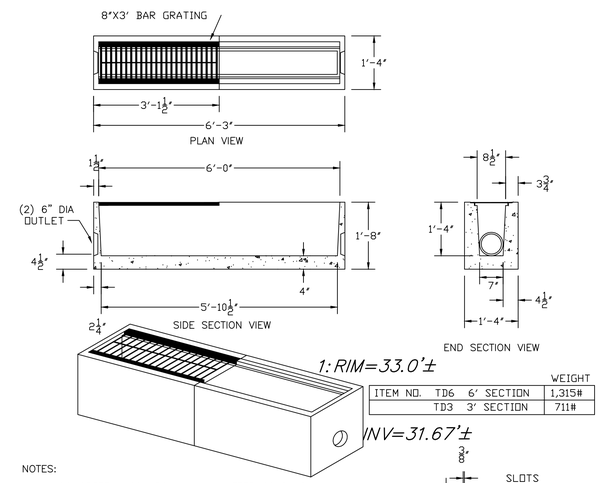

ITEM NO.			WEIGHT
	TD6	6' SECTION	1,315#
	TD3	3' SECTION	711#

NOTES:

1. CONCRETE: 4,000 PSI MINIMUM AFTER 28 DAYS.
2. AVAILABLE IN 3' AND 6' SECTIONS.
3. AVAILABLE IN END, MIDDLE, OR CLOSED SECTIONS.
4. DESIGNED FOR AASHTO HS-20 LOADING.

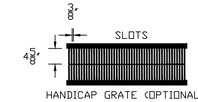

HANDICAP GRATE (OPTIONAL)

TRENCH DRAIN 8" x 16"

TRENCH DRAIN DETAIL

N.T.S.

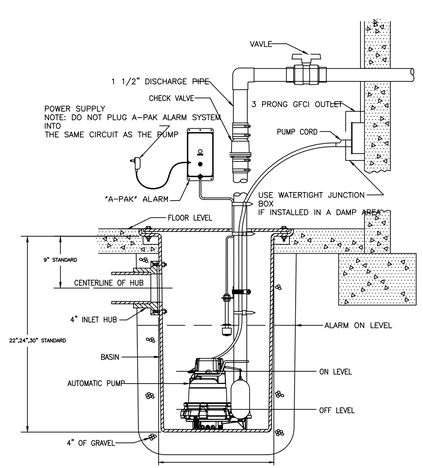

SUMP PUMP DETAIL

N.T.S

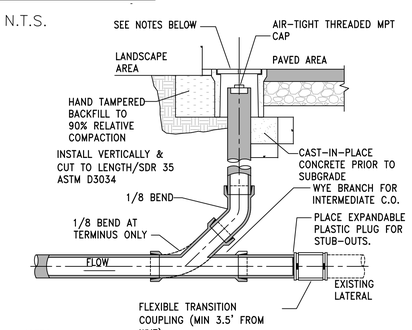

NOTES:

1. RECTANGULAR OR CIRCULAR BOXES ARE PERMITTED.
2. CONCRETE/FIBERLYTE LIDS ARE ACCEPTABLE IN NON-VEHICULAR AREAS. H-20 CAST IRON TRAFFIC LIDS AND BOXES IN VEHICULAR AREAS.
3. ALL CLEANOUT LIDS SHALL BE MARKED WITH AN "S" OR THE WORD "SEWER" FOR SANITARY SEWER CLEANOUTS
4. CLEANOUT PIPE SHALL BE THE SAME DIAMETER AS THE CONNECTED SITE PIPE.
5. TERMINATE C.O. AT CLOSEST JOINT TO SURFACE WITH TEMPORARY PLUG. AFTER ALL BACKFILL IS COMPLETE AND SUB-GRADE MADE IN AREAS TO BE PAVED, THE FINAL RISER PIPE AND BOX SHALL BE INSTALLED AS SHOWN.

CLEANOUT TO GRADE

NTS

Spruhan Engineering, P.C.
80 JEWETT ST, (SUITE 1)
NEWTON, MA 02458
Tel: 617-816-0722
Email:edmond@spruhaneng.com

19 KIMBALL BEACH ROAD
HINGHAM
MASSACHUSETTS

CIVIL PLANS

REVISION BLOCK

DESCRIPTION	DATE

All legal rights including, but not limited to, copyright and design patent rights, in the designs, arrangements and plans shown on this document are the property of Spruhan Engineering, P.C. They may not be used or reused in whole or in part, except in connection with this project, without the prior written consent of Spruhan Engineering, P.C.. Written dimensions on these drawings shall have precedence over scaled dimensions. Contractors shall verify and be responsible for all dimensions and conditions on this project, and Spruhan Engineering, P.C., must be notified of any variation from the dimensions and conditions shown by these drawings.

COMMONWEALTH OF MASSACHUSETTS
EDMOND S. SPRUHAN
CIVIL
No. 53316
REGISTERED PROFESSIONAL ENGINEER

DATE:	01/13/2026
DRAWN BY:	Y.L
CHECKED BY:	E.S
APPROVED BY:	E.S

DETAILS I

SHEET 3 OF 5

LAND DISTURBANCE SKETCH

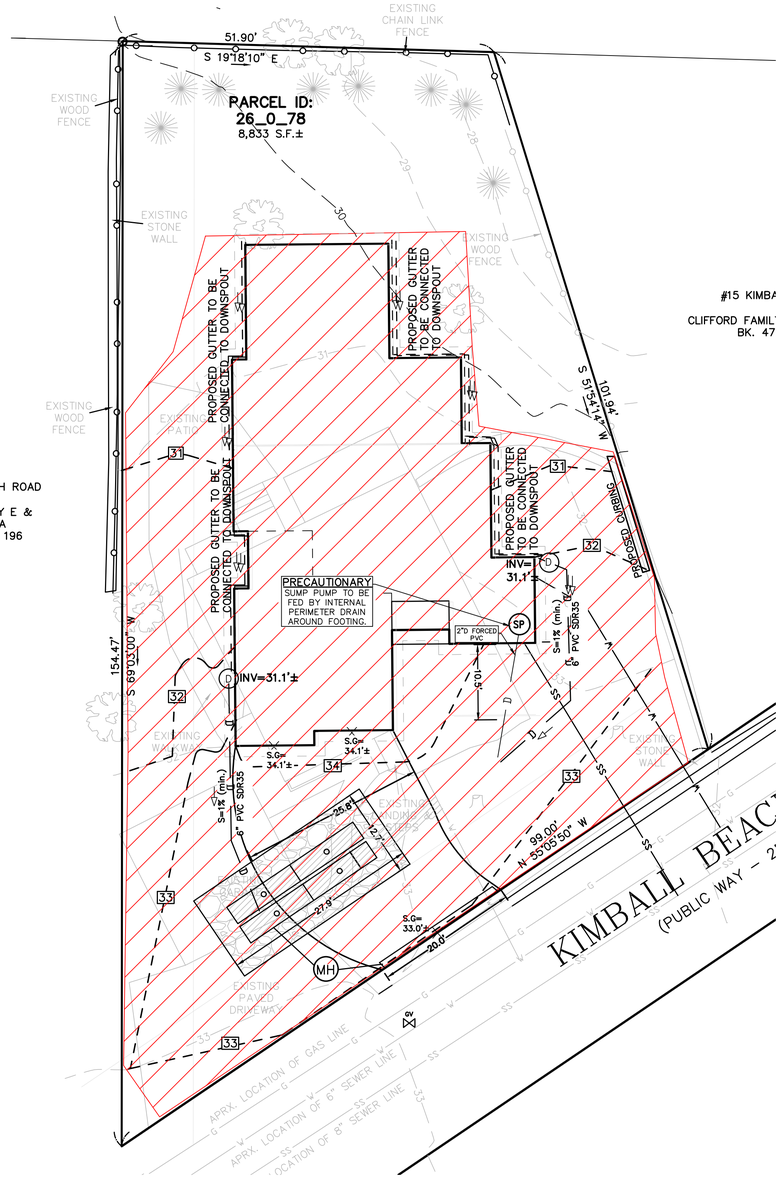

OVERALL LAND DISTURBANCE = 6,575.29 S.F

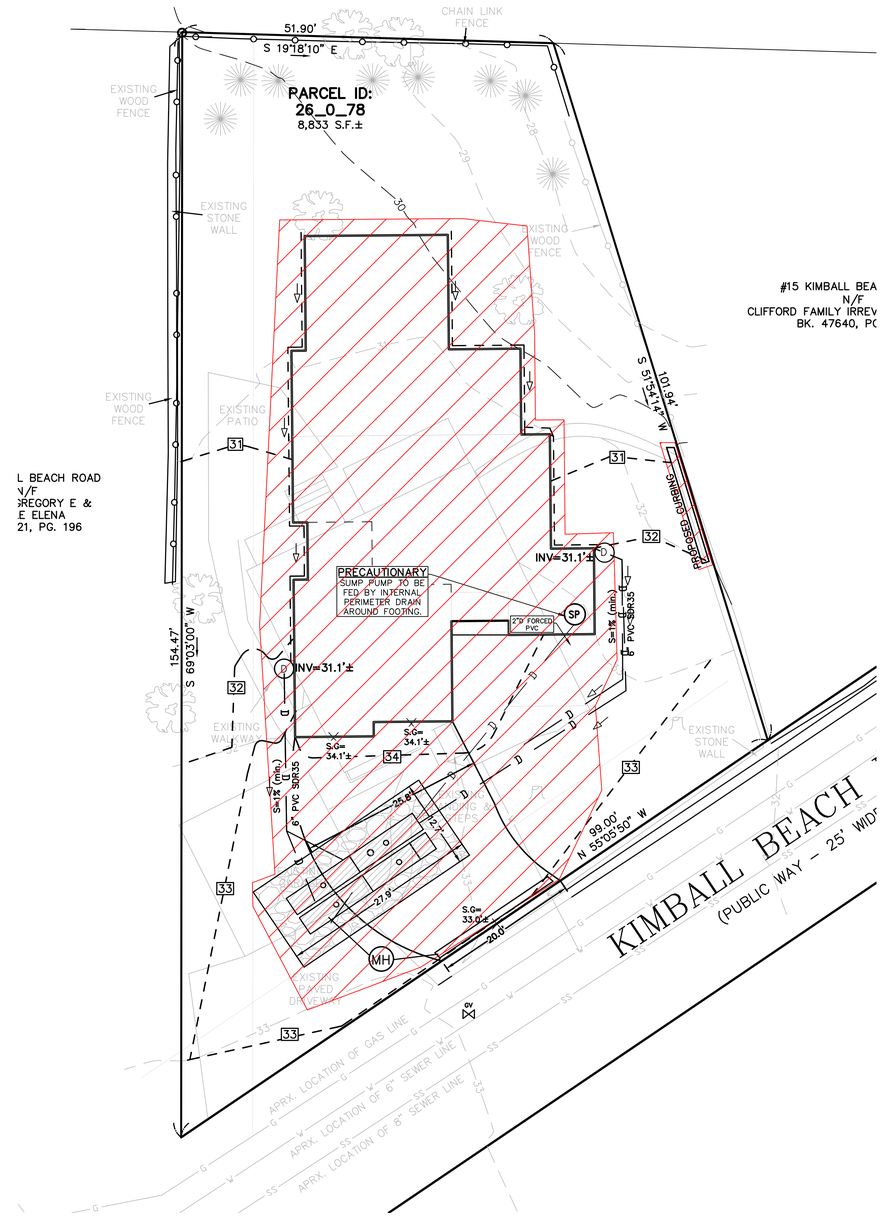

PERMANENT LAND DISTURBANCE = 4,370 S.F

Spruhan Engineering, P.C.
80 JEWETT ST, (SUITE 1)
NEWTON, MA 02458
Tel: 617-816-0722
Email:edmond@spruhaneng.com

19 KIMBALL BEACH ROAD
HINGHAM
MASSACHUSETTS

CIVIL PLANS

REVISION BLOCK

DESCRIPTION	DATE

All legal rights including, but not limited to, copyright and design patent rights, in the designs, arrangements and plans shown on this document are the property of Spruhan Engineering, P.C. They may not be used or reused in whole or in part, except in connection with this project, without the prior written consent of Spruhan Engineering, P.C.. Written dimensions on these drawings shall have precedence over scaled dimensions. Contractors shall verify and be responsible for all dimensions and conditions on this project, and Spruhan Engineering, P.C., must be notified of any variation from the dimensions and conditions shown by these drawings.

COMMONWEALTH OF MASSACHUSETTS
EDMOND SPRUHAN
CIVIL
No. 23318
REGISTERED PROFESSIONAL ENGINEER

DATE:	01/13/2026
DRAWN BY:	Y.L
CHECKED BY:	E.S
APPROVED BY:	E.S

LAND DISTURBANCE PLAN

SHEET 4 OF 5

EROSION CONTROL NOTES

1. THE EROSION CONTROL PLANS IN THIS SET SHALL BE REVIEWED AND IMPLEMENTED BY THE CONTRACTOR PRIOR TO COMMENCEMENT OF WORK. CONTRACTOR SHALL WORK WITH THE PROJECT'S ENGINEER THROUGHOUT CONSTRUCTION TO ENSURE THE SITE IS PROPERLY PROTECTED FROM POSSIBLE POLLUTANTS. THE ENGINEER HAS AUTHORIZATION TO ADD OR REMOVE BMP MEASURES THROUGHOUT CONSTRUCTION.
2. THE CONTRACTOR SHALL BE RESPONSIBLE FOR IMPLEMENTING AND MAINTAINING SITE EROSION CONTROL AT ALL TIMES.
3. IT SHALL BE THE RESPONSIBILITY OF THE OWNER AND THE PERMITTEE TO ENSURE THAT EROSION DOES NOT OCCUR FROM ANY ACTIVITY DURING OR AFTER PROJECT CONSTRUCTION. ADDITIONAL MEASURES, BEYOND THOSE SPECIFIED, MAY BE REQUIRED BY THE PLANNING DIRECTOR AS DEEMED NECESSARY TO CONTROL ACCELERATED EROSION.
4. AT THE END OF EACH WORKDAY, AT THE END OF EACH WORKWEEK, THE CONTRACTOR SHALL IMPLEMENT ALL TEMPORARY MEASURES NECESSARY TO PREVENT EROSION AND SILTATION, UNTIL THE PROJECT HAS BEEN FINALIZED. THESE MEASURES SHALL INCLUDE, BUT NOT BE LIMITED TO, DIRECT SEEDING OF THE AFFECTED AREAS, STRAW MULCHING, AND/OR INSTALLATION OF STRAW BALES DAMS/SILT FENCES.
5. DURING CONSTRUCTION, NO TURBID WATER SHALL BE PERMITTED TO LEAVE THE SITE. USE OF SILT AND GREASE TRAPS, FILTER BERMS, HAY BALES OR SILT FENCES SHALL BE USED TO PREVENT SUCH DISCHARGE.
6. ALL AREAS ON- AND OFF-SITE EXPOSED DURING CONSTRUCTION ACTIVITIES, IF NOT PERMANENTLY LANDSCAPED PER PLAN, SHALL BE PROTECTED BY MULCHING AND/OR SEEDING.
7. ALL EXCAVATED MATERIAL SHALL BE REMOVED TO AN APPROVED DISPOSAL SITE OR DISPOSED OF ON-SITE IN A MANNER THAT WILL NOT CAUSE EROSION.
8. ANY MATERIAL STOCKPILED, FOR LONGER THAN 14 DAYS, DURING CONSTRUCTION SHALL BE COVERED WITH PLASTIC.
9. UPON COMPLETION OF CONSTRUCTION, ALL REMAINING EXPOSED SOILS SHALL BE PERMANENTLY REVEGETATED.
10. IT IS THE CONTRACTOR'S RESPONSIBILITY TO SEE THAT ADDITIONAL MEASURES NECESSARY TO CONTROL SITE EROSION AND PREVENT SEDIMENT TRANSPORT OFF-SITE ARE IMPLEMENTED.
11. ALL SPILLS AND/OR LEAKS SHALL BE IMMEDIATELY CLEANED UP AND MITIGATED.

COMPOST SOCK INSTALLATION

1. LOCATE/MARK ANY UTILITIES.
2. CHECK ALL PERMITS.
3. OBTAIN COMPOST MEETING SPECIFICATIONS.
4. OBTAIN FILTER SOCK NETTING.
5. FILL FILTER SOCK NETTING WITH COMPOST.
6. MARK OUT AREA FOR FILTER SOCK; ORIENT LENGTH OF SOCK PARALLEL TO THE SLOPE SO THAT THE RUNOFF ENTERS AS SHEET FLOW.
7. IN HIGH-FLOW OR STEEP-SLOPE AREAS, ORIENT A SECOND SOCK PARALLEL TO THE FIRST TO DISSIPATE FLOWS.
8. LAY FILTER SOCK NETTING OUT AS PLANNED.
9. FILL FILTER SOCK WITH COMPOST.
10. STAKE FILTER SOCK EVERY 10 FT. STAKES SHOULD BE DRIVEN THROUGH THE CENTER OF THE SOCK, AND 1 FT INTO THE GROUND.
11. IF SOCK NETTING MUST BE JOINED, FIT BEGINNING OF THE NEW SOCK OVER THE END OF THE OLD SOCK, OVERLAPPING BY 1-2

ft. FILL WITH COMPOST; THEN STAKE THE JOIN.

TYPICAL MAINTENANCE SCHEDULE

INSPECT FILTER SOCKS PERIODICALLY, AND ESPECIALLY AFTER LARGE STORM EVENTS. ENSURE THAT THE FILTER SOCK IS INTACT, AND THATTHE AREA UPSTREAM HAS NOT FILLED WITH SEDIMENT. IF THE UPSTREAM AREA HAS FILLED WITH SEDIMENT, OR IF THE FILTER SOCK HAS BEEN OVERTOPPED, INSTALL ADDITIONAL FILTER SOCKS FURTHER UPSTREAM. SEDIMENT BEHIND THE SOCK SHOULD BE REMOVED WHEN THE DEPTH OF THE SEDIMENT REACHES 3.25-IN. FOR AN 8-IN. SOCK, 4.75-IN. FOR A 12-IN. SOCK AND 7.25-IN. FOR AN 18-IN. SOCK. FOR SOCKS WITH GREATER DIAMETERS, REMOVE SEDIMENT BEHIND THE SOCK WHEN THE ACCUMULATED SEDIMENT DEPTH REACHES 40 PERCENT OF THE DESIGN DIAMETER OF THE SOCK.

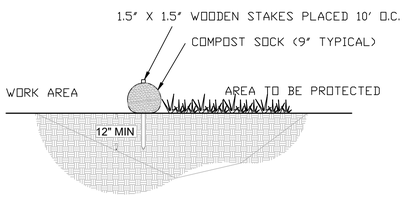

SECTION NTS

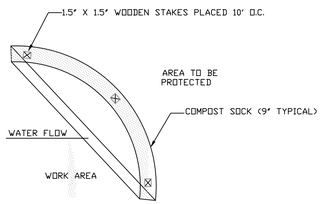

PLAN NTS

NOTES:
1. ALL MATERIAL TO MEET SPECIFICATIONS.
2. COMPOST SOCKS FILL TO MEET APPLICATION REQUIREMENTS.
3. FILTER MEDIA TO BE DISPERSED ON SITE, AS DETERMINED BY ENGINEER.

COMPOST SOCK DEETAIL
NTS

FR FR COMPOST SOCK

GRAPHIC SCALE

10 0 5 10 20 40

(IN FEET)
1 inch = 10 ft.

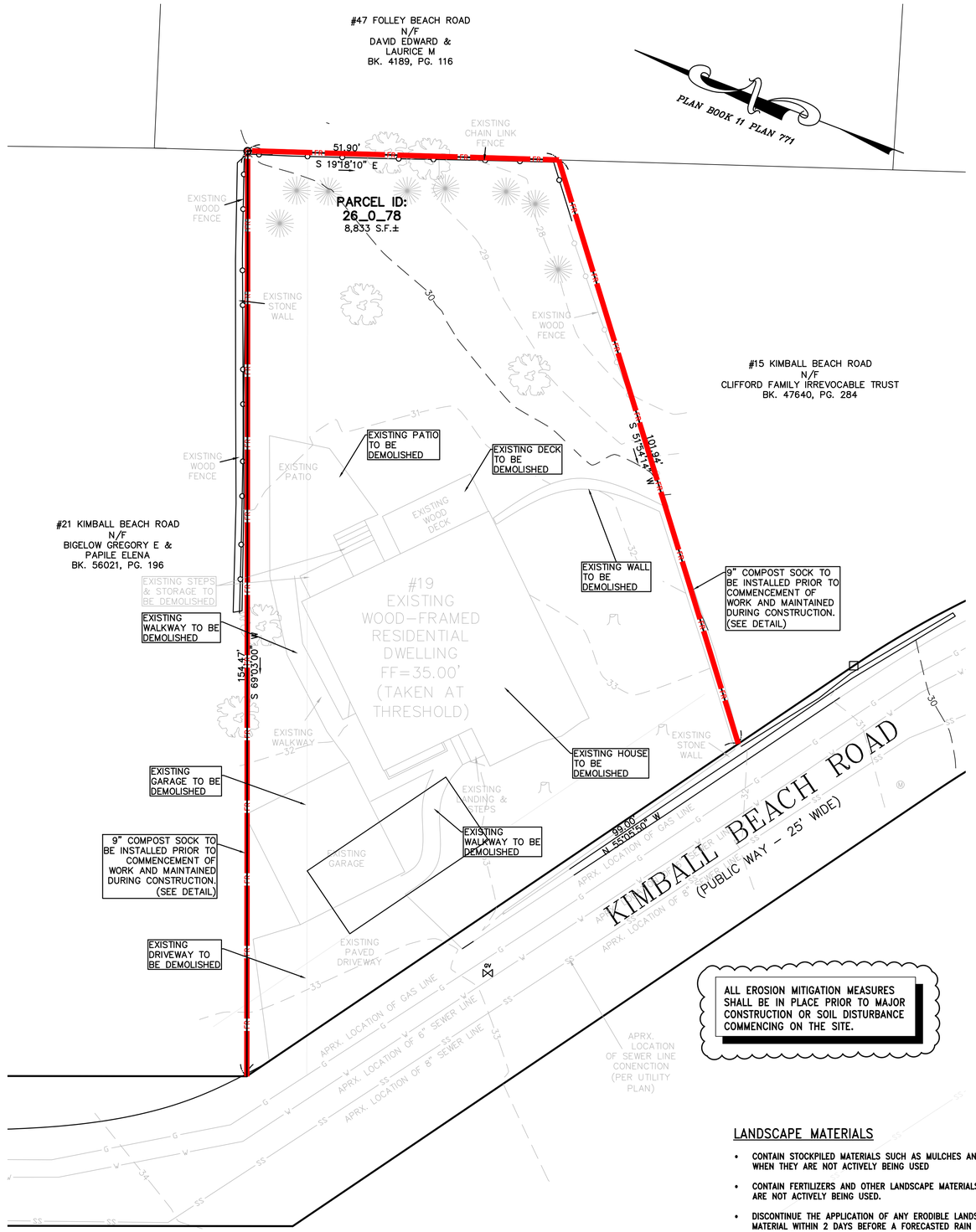

ALL EROSION MITIGATION MEASURES SHALL BE IN PLACE PRIOR TO MAJOR CONSTRUCTION OR SOIL DISTURBANCE COMMENCING ON THE SITE.

LANDSCAPE MATERIALS

- CONTAIN STOCKPILED MATERIALS SUCH AS MULCHES AND TOPSOIL WHEN THEY ARE NOT ACTIVELY BEING USED
- CONTAIN FERTILIZERS AND OTHER LANDSCAPE MATERIALS WHEN THEY ARE NOT ACTIVELY BEING USED.
- DISCONTINUE THE APPLICATION OF ANY ERODIBLE LANDSCAPE MATERIAL WITHIN 2 DAYS BEFORE A FORECASTED RAIN EVENT OR DURING PERIODS OF PRECIPITATION.
- APPLY ERODIBLE LANDSCAPE MATERIAL AT QUANTITIES AND APPLICATION RATES ACCORDING TO MANUFACTURE RECOMMENDATIONS OR BASED ON WRITTEN SPECIFICATIONS BY KNOWLEDGEABLE AND EXPERIENCED FIELD PERSONNEL.
- STACK ERODIBLE LANDSCAPE MATERIAL ON PALLETS AND COVERING OR STORING SUCH MATERIALS WHEN NOT BEING USED OR APPLIED.

LEGEND

	BOUND
	IRON PIN/PIPE
	STONE POST
	TREE
	TREE STUMP
	SHRUBS/FLOWERS
	SIGN
	BOLLARD
S	SEWER MANHOLE
D	DRAIN MANHOLE
	CATCH BASIN
W	WATER MANHOLE
WV	WATER VALVE
	HYDRANT
GV	GAS VALVE
E	ELECTRIC MANHOLE
EL	ELECTRIC HANDHOLE
	UTILITY POLE
	LIGHT POLE
M	MANHOLE
148.00	SPOT GRADE
TW	TOP OF WALL
BW	BOTTOM OF WALL
	EXISTING BUILDING
	RETAINING WALL
	STONE WALL
	FENCE
	TREE LINE
S	SEWER LINE
D	DRAIN LINE
W	WATER LINE
G	GAS LINE
E	UNDERGROUND ELECTRIC LINE
OHW	OVERHEAD WIRES
145	CONTOUR LINE (MJR)
146	CONTOUR LINE (MNR)

CONSTRUCTION MATERIALS

- ALL LOOSE STOCKPILED CONSTRUCTION MATERIALS THAT ARE NOT ACTIVELY BEING USED (I.E. SOIL, SPOILS, AGGREGATE, FLY-ASH, STUCCO, HYDRATED LIME, ETC.) SHALL BE COVERED AND BERMED.
- ALL CHEMICALS SHALL BE STORED IN WATERTIGHT CONTAINERS (WITH APPROPRIATE SECONDARY CONTAINMENT TO PREVENT ANY SPILLAGE OR LEAKAGE) OR IN A STORAGE SHED (COMPLETELY ENCLOSED).
- EXPOSURE OF CONSTRUCTION MATERIALS TO PRECIPITATION SHALL BE MINIMIZED. THIS DOES NOT INCLUDE MATERIALS AND EQUIPMENT THAT ARE DESIGNED TO BE OUTDOORS AND EXPOSED TO ENVIRONMENTAL CONDITIONS (I.E. POLES, EQUIPMENT PADS, CABINETS, CONDUCTORS, INSULATORS, BRICKS, ETC.).
- BEST MANAGEMENT PRACTICES TO PREVENT THE OFF-SITE TRACKING OF LOOSE CONSTRUCTION AND LANDSCAPE MATERIALS SHALL BE IMPLEMENTED.

WASTE MANAGEMENT

- DISPOSAL OF ANY RINSE OR WASH WATERS OR MATERIALS ON IMPERVIOUS OR PERVIOUS SITE SURFACES OR INTO THE STORM DRAIN SYSTEM SHALL BE PREVENTED.
- SANITATION FACILITIES SHALL BE CONTAINED (E.G. PORTABLE TOILETS) TO PREVENT DISCHARGES OF POLLUTANTS TO THE STORM WATER DRAINAGE SYSTEM OR RECEIVING WATER, AND SHALL BE LOCATED A MINIMUM 20 FEET AWAY FROM AN INLET, STREET OR DRIVEWAY, STREAM, RIPARIAN AREA OR OTHER DRAINAGE FACILITY.
- SANITATION FACILITIES SHALL BE INSPECTED REGULARLY FOR LEAKS AND SPILLS AND CLEANED OR REPLACED AS NECESSARY.
- COVER WASTE DISPOSAL CONTAINERS AT THE END OF EVERY BUSINESS DAY AND DURING A RAIN EVENT.
- DISCHARGES FROM WASTE DISPOSAL CONTAINERS TO THE STORM WATER DRAINAGE SYSTEM OR RECEIVING WATER SHALL BE PREVENTED.
- STOCKPILED WASTE MATERIAL SHALL BE CONTAINED AND SECURELY PROTECTED FROM WIND AND RAIN AT ALL TIMES UNLESS ACTIVELY BEING USED.

  PROCEDURES THAT EFFECTIVELY ADDRESS HAZARDOUS AND NON-HAZARDOUS SPILLS SHALL BE IMPLEMENTED.EQUIPMENT AND MATERIALS FOR CLEANUP OF SPILLS SHALL BE AVAILABLE ON SITE AND THAT SPILLS AND LEAKS SHALL BE CLEANED UP IMMEDIATELY AND DISPOSED OF PROPERLY; AND
- CONCRETE WASHOUT AREAS AND OTHER WASHOUT AREAS THAT MAY CONTAIN ADDITIONAL POLLUTANTS SHALL BE CONTAINED SO THERE IS NO DISCHARGE INTO THE UNDERLYING SOIL AND ONTO THE SURROUNDING AREAS.

Spruhan Engineering, P.C.
80 JEWETT ST, (SUITE 1)
NEWTON, MA 02458
Tel: 617-816-0722
Email:edmond@spruhaneng.com

19 KIMBALL BEACH ROAD
HINGHAM
MASSACHUSETTS

CIVIL PLANS

REVISION BLOCK

DESCRIPTION	DATE

All legal rights including, but not limited to, copyright and design patent rights, in the designs, arrangements and plans shown on this document are the property of Spruhan Engineering, P.C. They may not be used or reused in whole or in part, except in connection with this project, without the prior written consent of Spruhan Engineering, P.C.. Written dimensions on these drawings shall have precedence over scaled dimensions. Contractors shall verify and be responsible for all dimensions and conditions on this project, and Spruhan Engineering, P.C., must be notified of any variation from the dimensions and conditions shown by these drawings.

COMMONWEALTH OF MASSACHUSETTS
EDMOND SPRUHAN
CIVIL
No. 53187
REGISTERED PROFESSIONAL ENGINEER

DATE:	12/19/2025
DRAWN BY:	G.P
CHECKED BY:	E.S
APPROVED BY:	E.S

EROSION CONTROL & DEMOLITION PLAN

SHEET 5 OF 5